A Biometric Identity Based Signature Scheme

Seminar Biometry & Security

18.01.2010

Bonn-Aachen International Center for Information Technology
Nina Keller

Outline

- Motivation
  - Why Identity Based Signatures
  - Identity Based Signatures
- Preliminaries
  - Bilinear pairings
  - Fuzzy Extractor
  - Error Correction Codes
- The Extraction Process
- Signature Scheme
- Security Issues

Why Identity Based Signatures

- Identity Based cryptography is a type of public-key cryptography.
- Public key of a user is some unique information about the identity of the user (e.g. a user's email address).
- No exchanging of privat or public keys.
- No key directories.
- No third party, no certificates.
- No key revocation, once issued, keys are always valid.
- If there are only a finite number of users, after all users have been issued with keys master key can be destroyed.

Identity Based Signatures

- An identity-based scheme can be described as a collection of the following four algorithms:

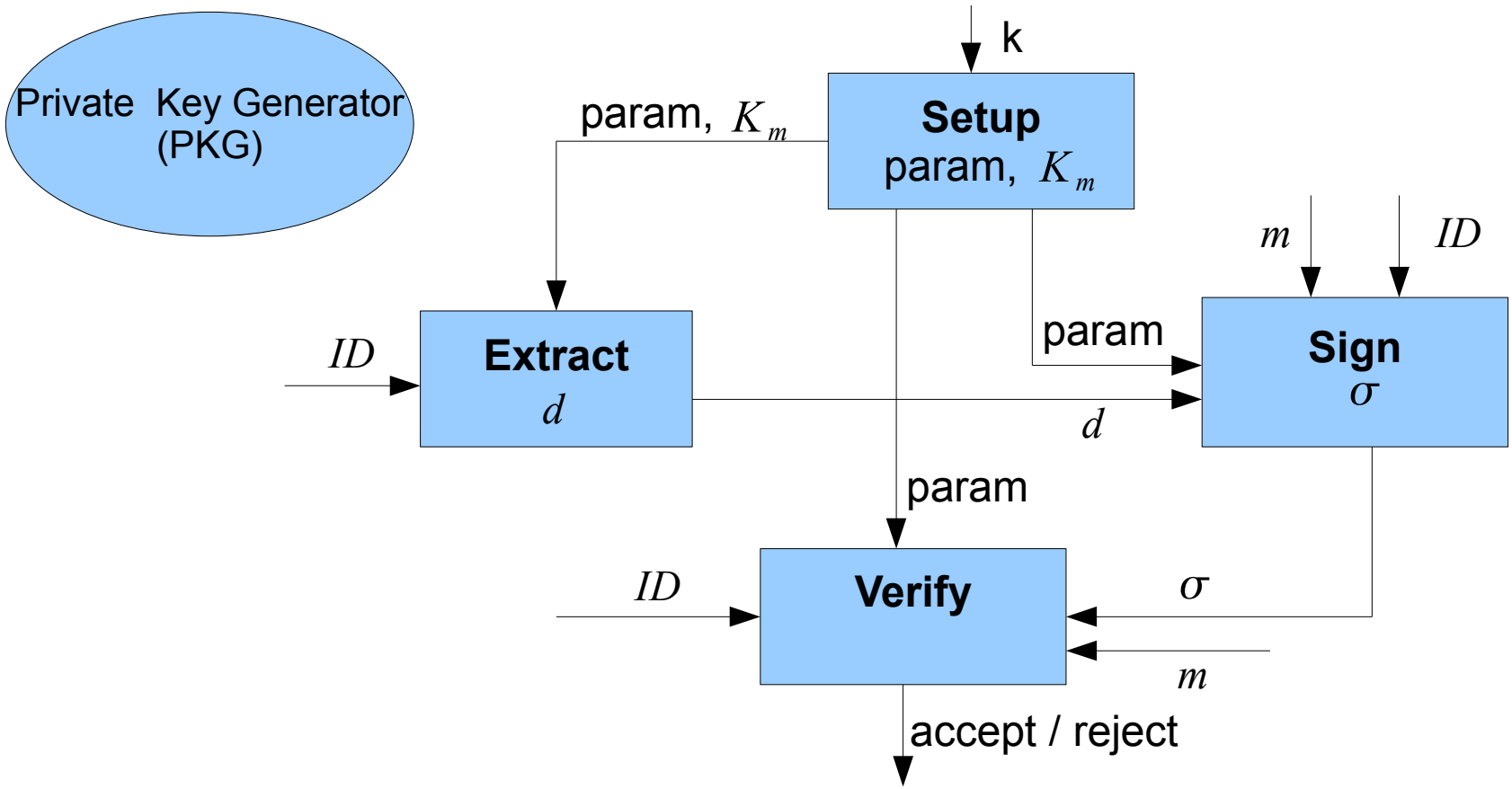

Preliminaries

Bilinear pairing

$$e: G_1 \times G_1 \rightarrow G_2$$

Properties:

- Bilinearity: $\forall P, Q \in G_1, a, b \in Z_p^*: e(aP, bQ) = e(P, Q)^{ab}$
- Non-Degeneracy: $\forall P \in G_1, P \neq \infty: e(P, P) \neq 1$
- e has to be computable in an efficient manner

Preliminaries

Tate pairing τ'_q

$$\tau'_q : E(F_p)[q] \times E(F_p^2)/qE(F_p^2) \to \mu(q)$$

$$\tau'_q(P, Q) = a + bi \in \mu(q)$$

$F_p = \{0, 1, 2, 3, \ldots, p-2, p-1\}$

$F_p^2 = \{a + ib\}, \quad a, b \in F_p, \quad i = \sqrt{-1}$

$E(F_p): y^2 = x^3 + x$

$E(F_p)[q]$ - subgroup of $E(F_p)$ consisting of points of order q

$\mu(q) = \{a \in F_p^2 | a^q = 1\}$

Preliminaries

Fuzzy Extractor

$M = \{0,1\}^v$ - a finite dimensional metric space consisting of biometric data points

$dis: \ M \times M \rightarrow Z^+$ - distance function

l - number of bits of the extracted output string *ID*

t - error threshold

(M, l, t) -fuzzy extractor is generated using two funktions:

- *Gen:* probabilistic generation procedure, on input $b \in M$ outputs an "extracted" string $ID \in \{0,1\}^l$ and public string PAR
- *Rep:* deterministic reproduction procedure allowing recovery of ID from the corresponding public string PAR and any b' sufficiently close to b

Preliminaries

Fuzzy Extractor

Our fuzzy extractor uses:

- *Hamming Distance* is defined to be the number of bit positions that differ between b' and b
- Error Correcting Codes

Preliminaries

Error Correcting Codes

- C - *subset of n*-bit words (i.e $C \subseteq \{0,1\}^n$) with $n > v$ and k having at least 2^k elements for some positive integer
- $C_e : M \rightarrow C$ – one-to-one encoding function
- $C_d : \{0,1\}^n \rightarrow C$ - decoding function that has an error threshold of t

- The decoding function C_d will take an arbitrary n-bit string and "correct" it to the nearest codeword in C

Preliminaries

Error Correcting Codes

- Example:
  - Let $n=3, v=1$ and $C=\{000,111\}$
  - Let C_d compute majority
  - Then C_d would map a bitstring $x \in \{0,1\}^3$ to 000 if at least two bits of x are 0s and to 111 if at least two bits are 1s .
  - Threshold $t=1$

The Extraction Process

Step 1: obtaining b from the biometric reader

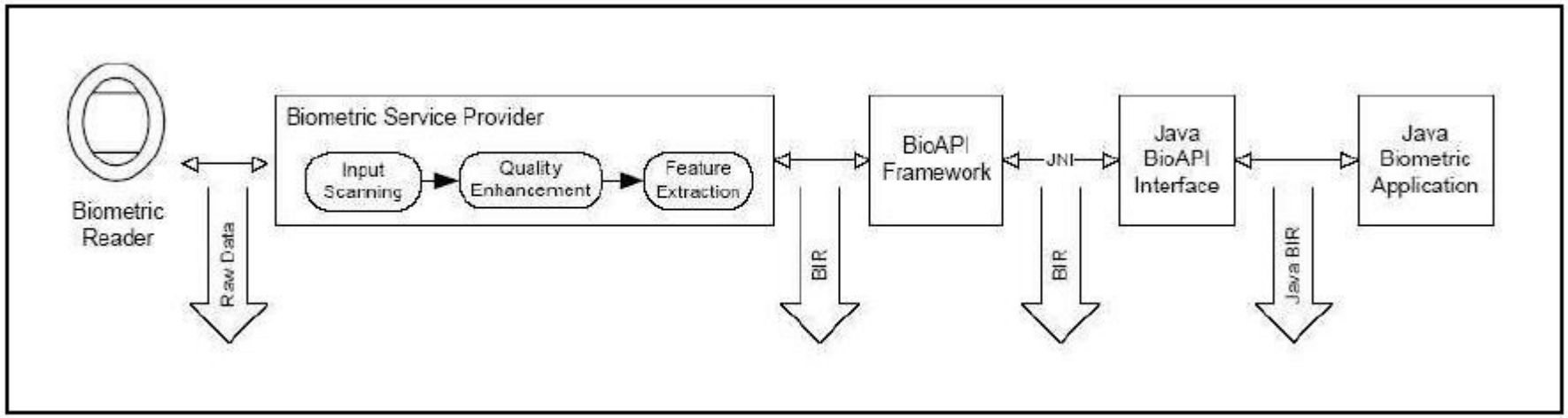

The Extraction Process

Step 2: use an error correcting codes to fuzzy extract some data from the biometric input.

- *Gen* function:

$$ID = H(b)$$

$$RAP = b \oplus C_e(ID)$$

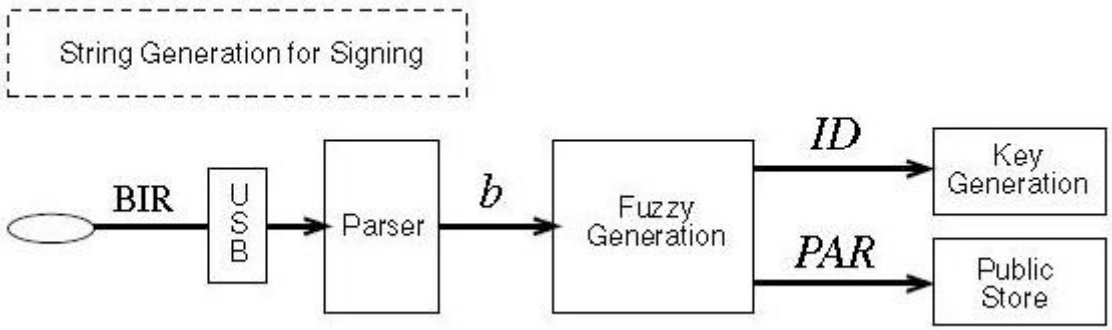

The Extraction Process

***Step 2*:** use an error correcting codes to fuzzy extract some data from the biometric input.

- *Rep* function:

$$ID' = C_d(b' \oplus PAR) = C_d(b' \oplus b \oplus C_e(ID))$$

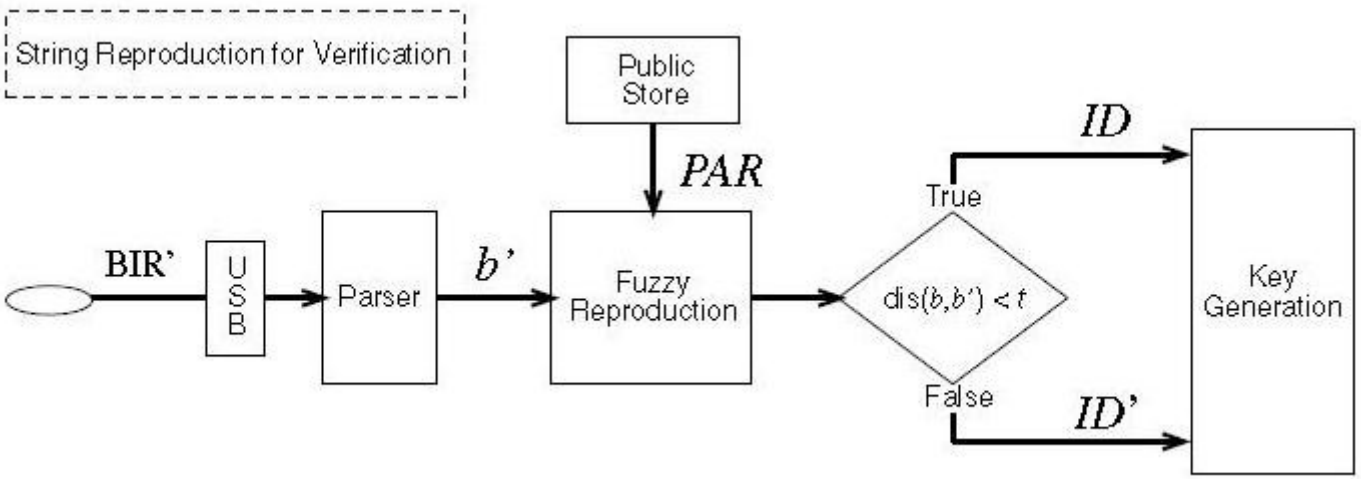

Signature Scheme

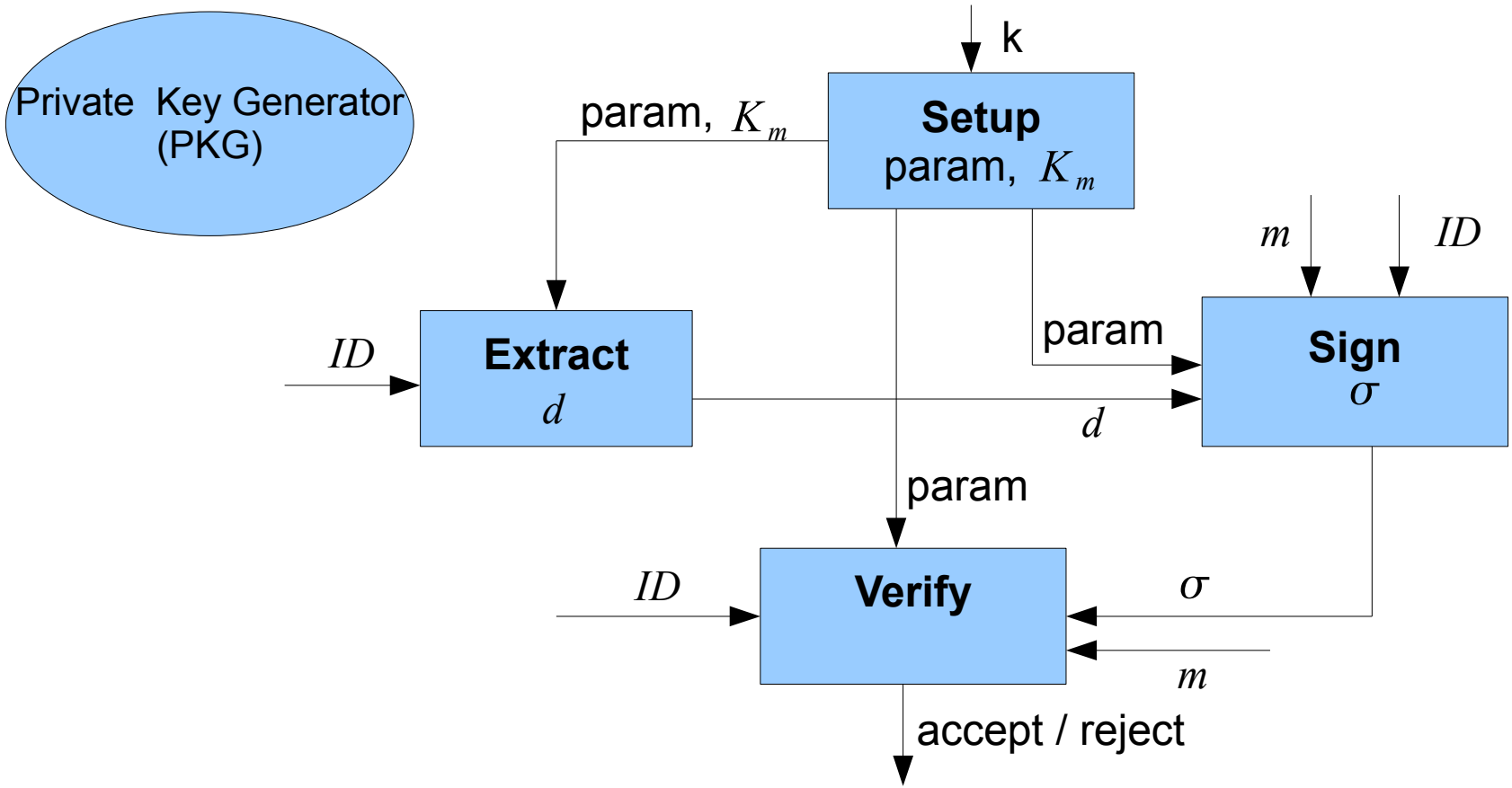

Signature Scheme

Setup:

Given a *security parameter* k PKG selects:

- Groups $G_{1,} G_2$ of prime order $q > 2^k$
- A generator P of G_1
- Randomly chosen *master key* $s \in Z_q^+$ and the associated *public key* $P_{pub} = sP$
- Cryptographic hash functions of the same domain range $H_{1,} H_2 : \{0,1\}^+ \rightarrow G_1^+, \quad H_3 : b \rightarrow \{0,1\}^+$
- Encoding function C_e and a decoding function C_d
- It also selects a method for extracting the features of a biometric, F_e

Signature Scheme

Key Generation

- After obtaining b using feature extractor F_e the identity string is calculated $ID = H_3(b)$

- The PKG computes the public key $Q_{ID} = H_1(ID) \in G_1$ and the associated private key $d_{ID} = sQ_{ID} \in G_1$

Signature Scheme

Sign

To sign a message M:

1) Pick a random integer $r \in Z_q$ and compute $U = rP \in G_1$
   Then $H = H_2(ID, M, U) \in G_1$.

2) Compute $V = d_{ID} + rH \in G_1$

3) The value $PAR = b \oplus C_e(ID)$ is included as part of the signature

The signature on M is the triple $\sigma = \langle U, V, PAR \rangle$

Signature Scheme

Verify

To verify a signature $\sigma = \langle U, V, PAR \rangle$ on a message M for an identity ID, the verifier performs the following steps:

1) Obtain a biometric reading b' and calculate $ID' = Rep(b', PAR)$
2) Calculate $Q'_{ID} = H_1(ID') \in G_1$ and $H = H_2(ID', M, U) \in G_1$.
3) Signature is verified if $e(P, V) = e(P_{pub}, Q'_{ID}) e(U, H)$ and rejected otherwise.

Security Issues

- Malicious signing
  - Biometric data can be obtained relatively easely
  - Attacker can't sign a document (he still doesn't have private key)
  - Attacker can attempt to acquire the private key
    - Solution: imposing proper authentication procedures for users applying to the PKG (certificates)

Security Issues

- Disavowal
  - If fuzzy extractor is not robust, attacker can tamper with ID
  - Attacker can try to alter his biometrics (wear a thin film with another print on his finger)
    - **Solution**: inspect the biometrics before mesaurement.